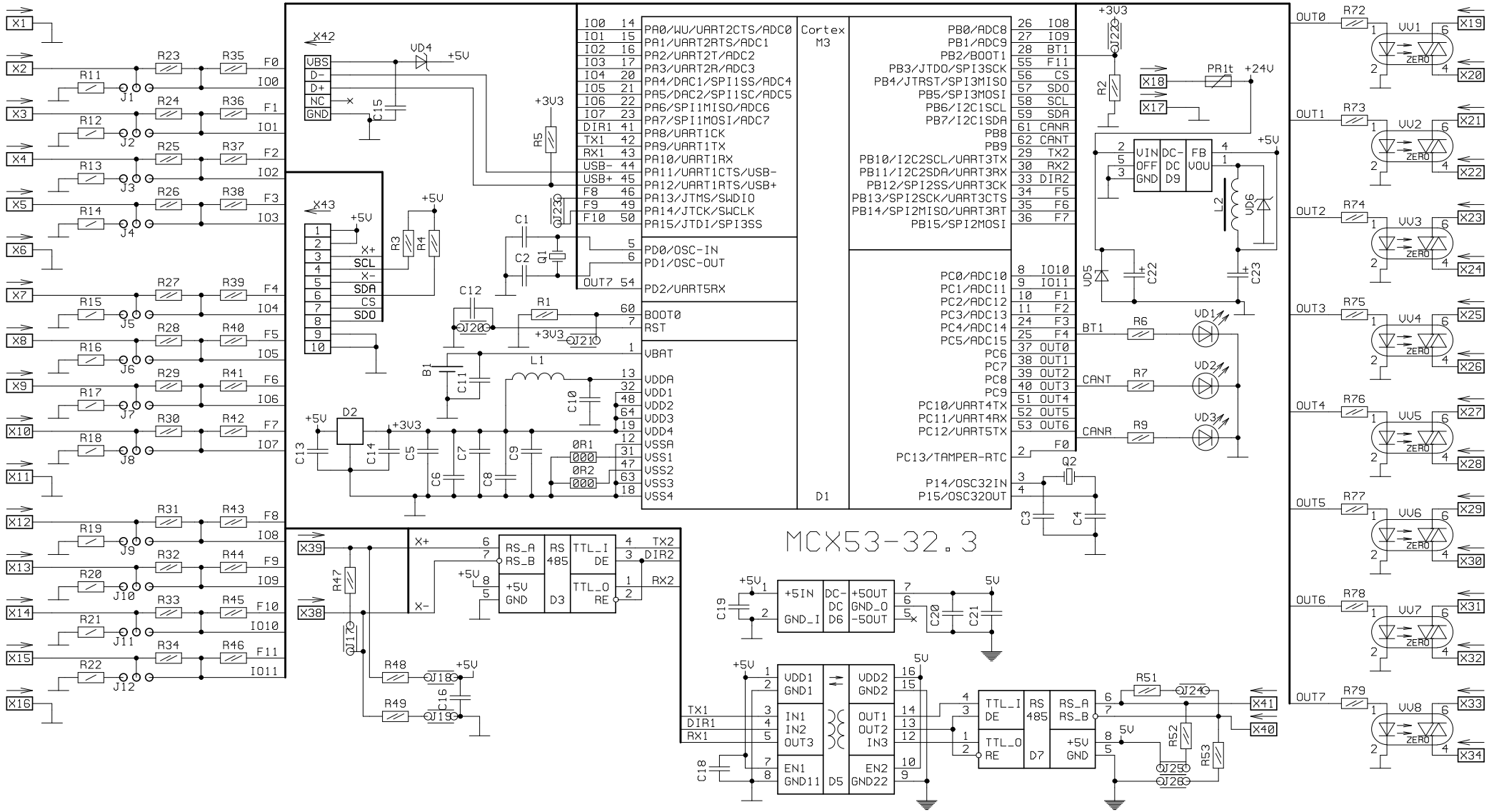
MCX53-32.3
Cortex M3
D1
PA0/WU/UART2CTS/ADC0
PA1/UART2RTS/ADC1
PA2/UART2T/ADC2
PA3/UART2R/ADC3
PA4/DAC1/SPI1SS/ADC4
PA5/DAC2/SPI1SC/ADC5
PA6/SPI1MISO/ADC6
PA7/SPI1MOSI/ADC7
PA8/UART1CK
PA9/UART1TX
PA10/UART1RX
PA11/UART1CTS/USB-
PA12/UART1RTS/USB+
PA13/JTMS/SWDIO
PA14/JTCK/SWCLK
PA15/JTDI/SPI3SS
PD0/OSC-IN
PD1/OSC-OUT
PD2/UART5RX
BOOT0
RST
VBAT
VDDA
VDD1
VDD2
VDD3
VDD4
VSSA
VSS1
VSS2
VSS3
VSS4
PB0/ADC8
PB1/ADC9
PB2/BOOT1
PB3/JTDO/SPI3SCK
PB4/JTRST/SPI3MISO
PB5/SPI3MOSI
PB6/I2C1SCL
PB7/I2C1SDA
PB8
PB9
PB10/I2C2SCL/UART3TX
PB11/I2C2SDA/UART3RX
PB12/SPI2SS/UART3CK
PB13/SPI2SCK/UART3CTS
PB14/SPI2MISO/UART3RT
PB15/SPI2MOSI
PC0/ADC10
PC1/ADC11
PC2/ADC12
PC3/ADC13
PC4/ADC14
PC5/ADC15
PC6
PC7
PC8
PC9
PC10/UART4TX
PC11/UART4RX
PC12/UART5TX
PC13/TAMPER-RTC
P14/OSC32IN
P15/OSC32OUT
VIN OFF GND
DC-DC D9
FB VOU
L2
VD6
VD5
C22
C23
PR1t
+24V
+3V3
+5V
5V
X42
VBS
D-
D+
NC
GND
X43
X+
SCL
X-
SDA
CS
SDO
VD4
C15
R5
R3
R4
C1
C2
Q1
C12
R1
B1
C11
L1
C10
D2
C13
C14
C5
C6
C7
C8
C9
0R1
0R2
R2
Q2
C3
C4
X39
X38
R47
RS_A RS_B
+5V GND
RS 485
D3
TTL_I DE
TTL_O RE
TX2
DIR2
RX2
R48
R49
C16
+5IN GND_I
DC-DC D6
+5OUT GND_O -5OUT
C19
C20
C21
VDD1 GND1
IN1 IN2 OUT3
EN1 GND11
D5
VDD2 GND2
OUT1 OUT2 IN3
EN2 GND22
TX1
DIR1
RX1
C18
D7
R51
R52
R53
X41
X40
X18
X17
BT1
CANT
CANR
R6
R7
R9
VD1
VD2
VD3
OUT0
OUT1
OUT2
OUT3
OUT4
OUT5
OUT6
OUT7
R72
R73
R74
R75
R76
R77
R78
R79
VV1
VV2
VV3
VV4
VV5
VV6
VV7
VV8
ZERO
X19
X20
X21
X22
X23
X24
X25
X26
X27
X28
X29
X30
X31
X32
X33
X34